THE EDUCATION FUND

FOR EXCELLENCE IN MIAMI-DADE PUBLIC SCHOOLS

2023
2024

Ideas with IMPACT

STEM

Exploring the Microscopic World

IDEA PACKET SPONSORED BY:

ASSURANT®

Exploring the Microscopic World

Interactive Workshop with LCD Microscopes

Presented by:

Karen Weaver Gant, National Board Certified Teacher
Lake Stevens Elementary School
kwgant@dadeschools.net

....

Table of Contents

Goals and Objectives…….…….…….Page 3

Florida Standards……...…….Page 4

Course Overview…….……Page 5

Implementation Guide…….……Pages 6-12

- Microscope Use: Safety Basics – Pages 6-7
- Product Information – Pages 7 – 11
- Proper Handling – Page 11
- Cleaning and Storage – Page 12

Lesson Integration Enrichment - Food Forest Exploration – Hidden Gems……..…Pages 12-13

Resource List…….……Page 14

Goals and Objectives

Participants can expect to:

- receive an introduction to Digital Microscopes - (features and capabilities including portability and ease of use.)
- review care and safety rules.
- participate actively in an Outdoor Exploration activity using the microscopes.
- examine possibilities for successful integration of this tool into existing curriculum.
- participate in hands-on, minds-on activities that can successfully integrated into their existing Food Forest/classroom.

Florida Standards

SC.2.L16.1- Observe and describe major stages in the life cycles of plants and animals, including beans and butterflies (https://drive.google.com/file/d/16EoDJUfx_TwoXfuJg6dK7LSyZRzLsvTK/view?usp=drive_link)

SC.3.P.8.3 Comparing Properties of Materials- Students go outdoors to collect two objects and they use rulers and magnifying glasses to make observations and to compare and contrast the observed properties (Properties of Matter)

SC.3.L15.1-Classify parts of plants into groups based on physical characteristics (Classify Animals)

SC.5N.1.In.1- Ask a question about he natural world, use selected reference materials to find information, work with others to carry out a simple experiment, and share results.

SC.4.E.6.2 Minerals and Rocks- Students observe and document the charachteristics of different rocks (Rocks and Minerals)

Gifted Technology

G.K12.5.3.3a Technology - Know: Identify appropriate technology to achieve a project goal.

G.K12.3.1.1a Cooperative Research- Know: Participate in a cooperative group to solve problems and/or complete a research project

Course Overview

Step outside the confines of traditional classrooms and dive into the captivating world of microscopic exploration with our engaging workshop, "Exploring the Microscopic World Outdoors." This unique learning experience harnesses the power of LCD microscopes to bring the wonders of nature up close while embracing the nature that surrounds us. In this hands-on workshop, participants can uncover hidden marvels in their natural surroundings using state-of-the-art LCD microscopes. These portable and user-friendly devices feature high-resolution screens, allowing for immediate observation and analysis of microscopic specimens.

- Utilize a check out system to utilize the microscopes for class use.
- Introduction to LCD Microscopes: Learn about the features and capabilities of LCD microscopes, including their portability, and ease of use.
- Outdoor Exploration: Venture into nearby natural environments, gardens, or forested areas, to collect samples of various specimens.
- Hands-on Microscopic Analysis: Utilize the LCD microscopes to observe and analyze collected samples on the spot. Right before their eyes, participants will witness the hidden beauty and complexity of organisms, such as insects, and plants.
- Group Discussions: Engage in thought-provoking discussions, participants can share observations, ask questions, and explore the ecological significance of the microscopic world.
- Practical Tips and Techniques: Receive guidance on focusing techniques, and image capture using the LCD microscopes.

Lesson Plans and Step-by-Step Guide in Implementation

IMPLEMENTATION GUIDE

Microscope Use: Safety Basics

It is critical that you begin the learning journey with an overview of the basic care and safety for use of this amazing tool. Setting parameters for young learners will result in a positive experience for all involved. Sometimes a microscope can seem like a fun new toy, but students must become familiar with the fact that improper handling can cause serious problems.

The first step is for students to know the parts and function for the microscope. If possible all them to read the manual, or listen to your specific instructions on how everything works. Emphasize that they are not to touch any controls without knowing what they are intended to do. They also must be reminded to handle all parts with care. Proper attention devoted to learning the microscopes as we start this process can save injury to the instrument or students.

My set of microscopes were purchased from Amazon.com. Below are some short videos from that site that allow students to become familiar with the microscope:

https://www.amazon.com/vdp/04433ffe8f354caab00564f6aa477085?ref=dp_ive_vftp_0

https://www.amazon.com/vdp/0ebb5fa12b974a8aad119b4bcfdf551b?ref=dp_ive_vftp_1

https://www.amazon.com/vdp/0bbb59ff0ddf4ae79752876b011a5b65?ref=dp_ive_vftp_2

Product Information

WARM TIPS

- Please launch the installed software only when it is connected to a PC and ready for observations.
- Turn the knobs on both sides of the bracket clockwise to increase the height of the microscope, and counterclockwise to decrease the height.
- Rotate the knob under the microscope screen to adjust the focal length of the lens to provide a clear image.
- Rotate an LED lights knob on the side of the back of the screen to adjust the brightness of the fill light at the lens.
- Rotate the knob on the back of the base to adjust the brightness of the 2 fill lights.
- It works with Windows XP SP2/Win7/Win8/Win10 MacOS x10.5 or higher.

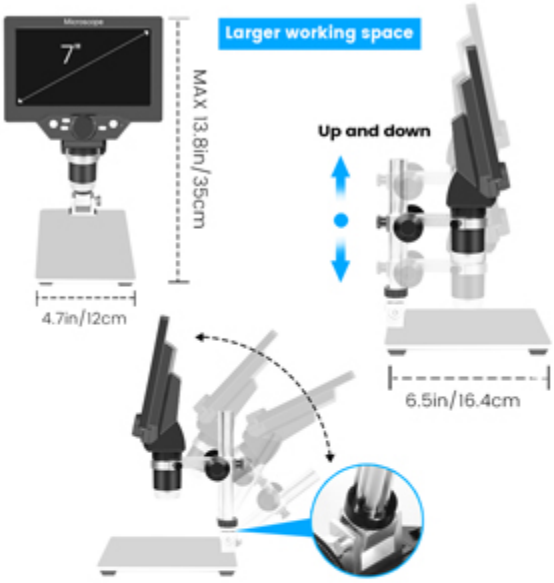

Height & Angle Adjustable Bracket

The bracket can be adjusted up and down freely, very convenient to adjust the object distance. The angle of the stand is also adjustable,so users can choose the most comfortable and suitable angle from the display.

7 Inch Large LCD Screen

7 inch high-definition display, whether it is taking photos, videos or image analysis and testing, It can be observed more clearly and conveniently, and easily meets visual needs.7 inch large screen provides a broad field of view for easy viewing.

Rechargeable Lithium Battery

It powered by rechargeable Li-ion battery or powered directly via USB.Truly portable and independent. (Pls make sure the USB cable connect correctly as the picture)

Connect with PC USB port directly for Larger View

PC View

Support real-time viewing on PC when connected to a computer via USB cable,Please launch the installed software only when your microscope is connected to a PC and ready for observations.(The larger the connected monitor,the higher the magnification)

The chart below can be used for reference. Students may be familiar with the traditional microscope in their classroom science kits. As they will learn, the digital microscope has some parts that are the same, and some that are different. Allow them to explore both and compose a list of the similarities and differences:

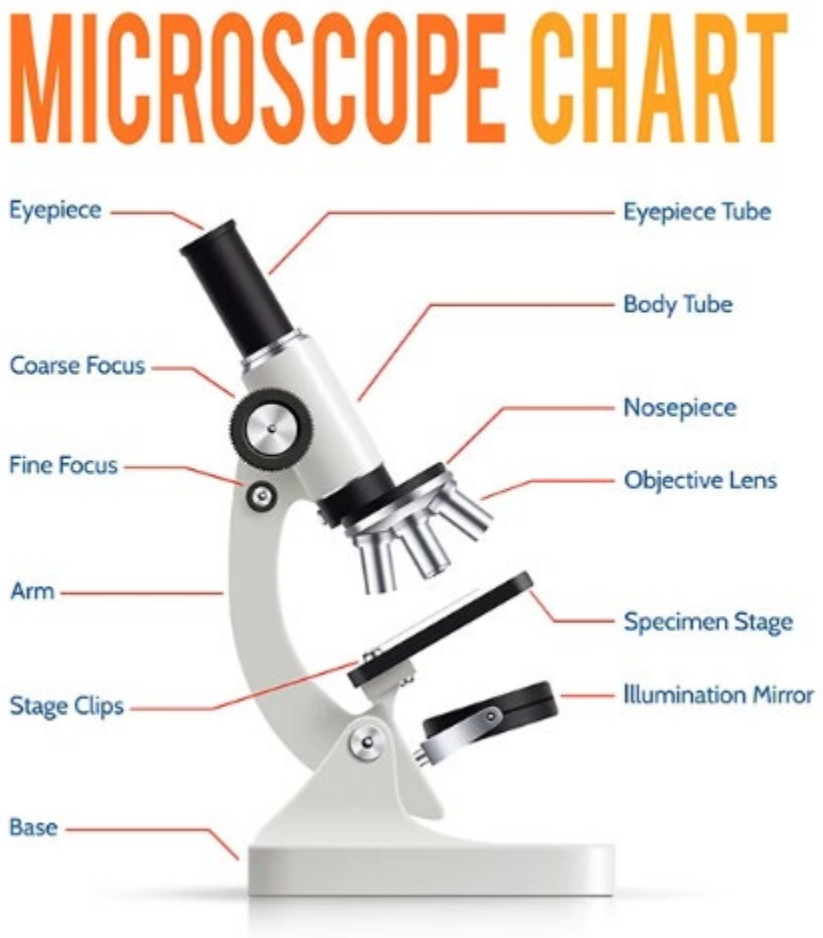

<u>Proper handling</u>

The digital microscope is perfect for Food Forest or Garden explorations. It is lightweight and portable which works well in my elementary setting. I have found it to be surprisingly durable – even with primary students. However, students must be taught to respect the equipment when transporting it from one location to another. Please have them carry the microscope with <u>both</u> hands. One hand should be place on the bottom, while the other hand is placed behind the screen.

Teach them to respect the light source. During transport they should be aim down over the stage area to prevent damage. Ensure that the light sources is shut off with not in direct use. This will safe energy so that it can be ready on demand in your Food Forest or other field experiences.

Cleaning and storage

Our microscopes hold specimens of all kinds during field experiences. Students examine leaves, soil, and other interesting things they find during our visit. Part of the process for my students is to be courteous to others by cleaning the microscope before returning it to the classroom.

Students will use the same care and respect when transporting the microscope to the designated classroom storage space.

Microscope safety is not a complicated process. However, it requires proper planning and courtesy to fellow users. Clean, carefully handled microscopes will last throughout the years and will provide many hands-on, minds-on experiences for your students, while protecting your investment.,

LESSON INTEGRATION ENRICHMENT – FOOD FOREST EXPLORATION – HIDDEN GEMS

In order to successfully integrate the use of these amazing tools into my classroom as an enrichment activity I decided to "work smarter, not harder." The Education Fund has worked with Miami-Dade County Public Schools to create standards-based lessons, which are included in the Science Pacing Guide for each grade level. It is a smooth transition to utilize these existing interactive lessons and add the use of the digital microscopes to take the learning experience to a new level. In order to access these lessons just follow these steps:

- Log into your portal – click on Schoology
- Click on "Groups"
- Click on "Curriculum Resources"
- Look in the left-hand column and click on "Resources"
- Click on "Elementary" or appropriate level
- Click on "Science"
- Click on appropriate grade level
- Click on "Quarter – Pacing Guides"
- Click on specific lesson (Pacing Guides)
- Scroll down to the resources section (near the bottom of the page) for "Ed Fund"
- Click on "Food Forest Resources" (See example below)

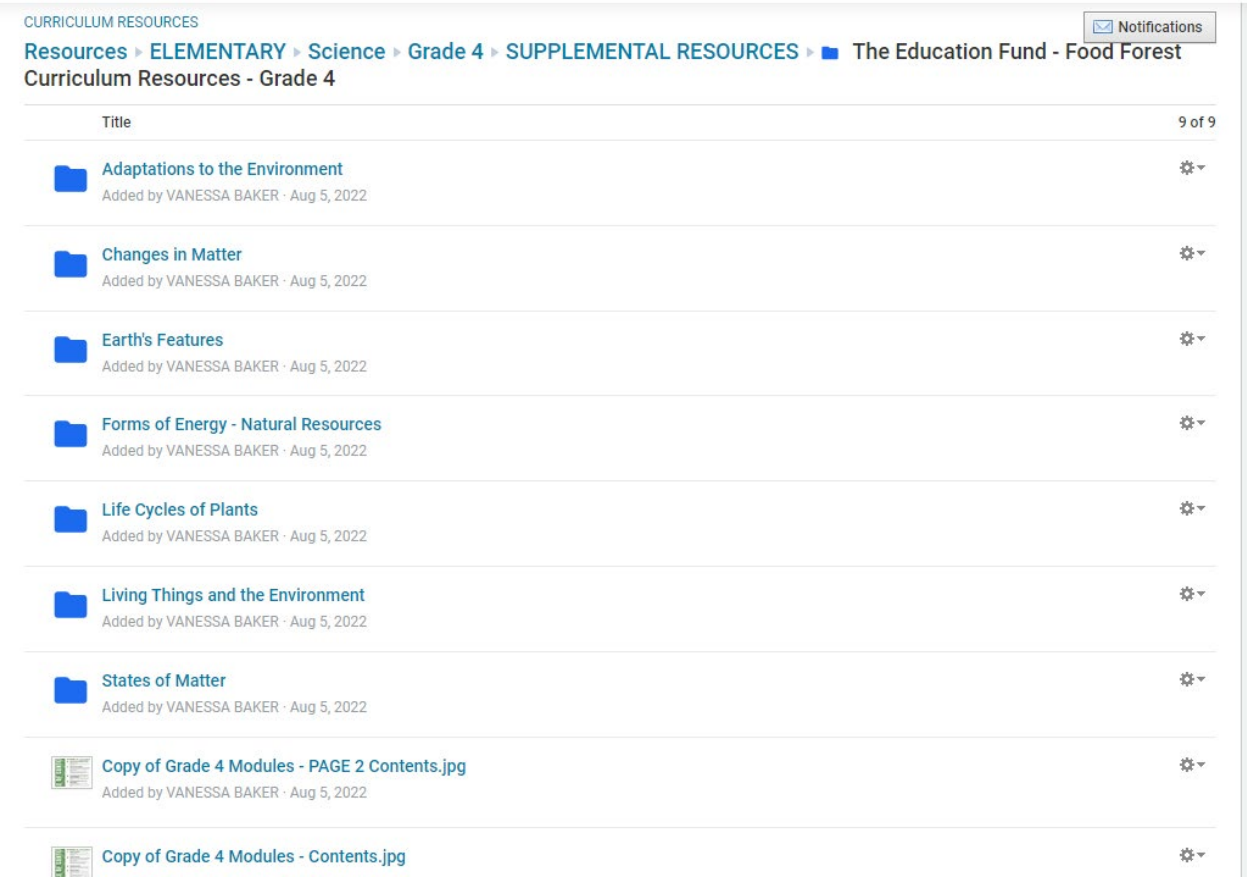

There are a plethora of amazing lessons for you and your students to explore. While using these is very easy to add the microscopes as an additional enrichment exploration station. See….work smarter, not harder!

RESOURCE LIST

- https://amscope.com/pages/how-to-use-microscope
- Amazon.com
- https://www.amazon.com/Microscope-Micsci-Magnification-Rechargeable-Soldering/dp/B09GK66136/ref=sr_1_3_pp?crid=2C7BWMKKOZ4X0&keywords=digital+microscope+with+screen&qid=1694360488&sprefix=digital+mic%2Caps%2C118&sr=8-3&ufe=app_do%3Aamzn1.fos.006c50ae-5d4c-4777-9bc0-4513d670b6bc

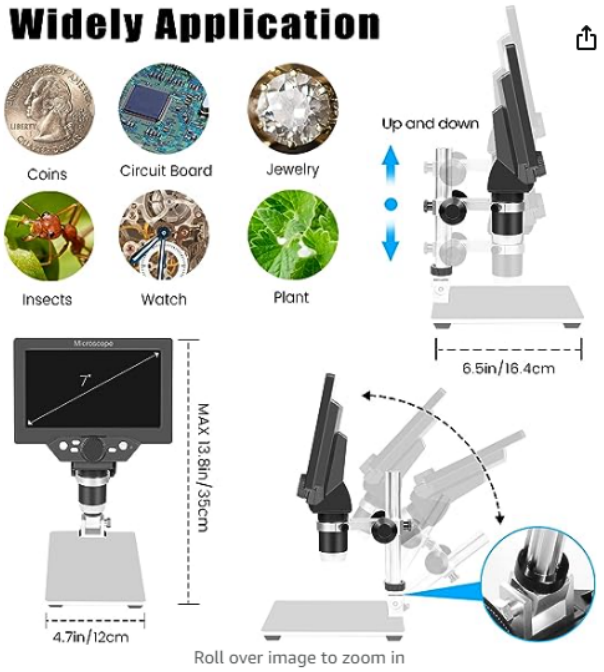

7 inch LCD Digital USB Microscope with 32G TF Card,Micsci 1200X Magnification 12MP 1080P Handheld Camera Video Recorder,PC View,Rechargeable Battery,Fill Lights for Coins PCB Soldering Circuit Board

Visit the Micsci Store

4.3 ★★★★☆ 199 ratings

Amazon's Choice for "coin collecting microscope"

-19% $83.99

Typical price: $103.99

✓prime Same-Day

FREE Returns

Exclusive Prime price

Coupon: Apply 5% coupon Shop items › | Terms

Thank you for being a Prime Member. Pay $83.99 $0.00 for this order. Get a **$125 Amazon Gift Card** upon approval for the **Amazon Business Prime Card** with an eligible Prime membership. Terms apply.

- https://dadeschools.schoology.com/group/5123593020/materials#/group/5123593020/materials?f=228185480
- https://www.amazon.com/vdp/04433ffe8f354caab00564f6aa477085?ref=dp_ive_vftp_0
- https://www.amazon.com/vdp/0ebb5fa12b974a8aad119b4bcfdf551b?ref=dp_ive_vftp_1
- https://www.amazon.com/vdp/0bbb59ff0ddf4ae79752876b011a5b65?ref=dp_ive_vftp_2